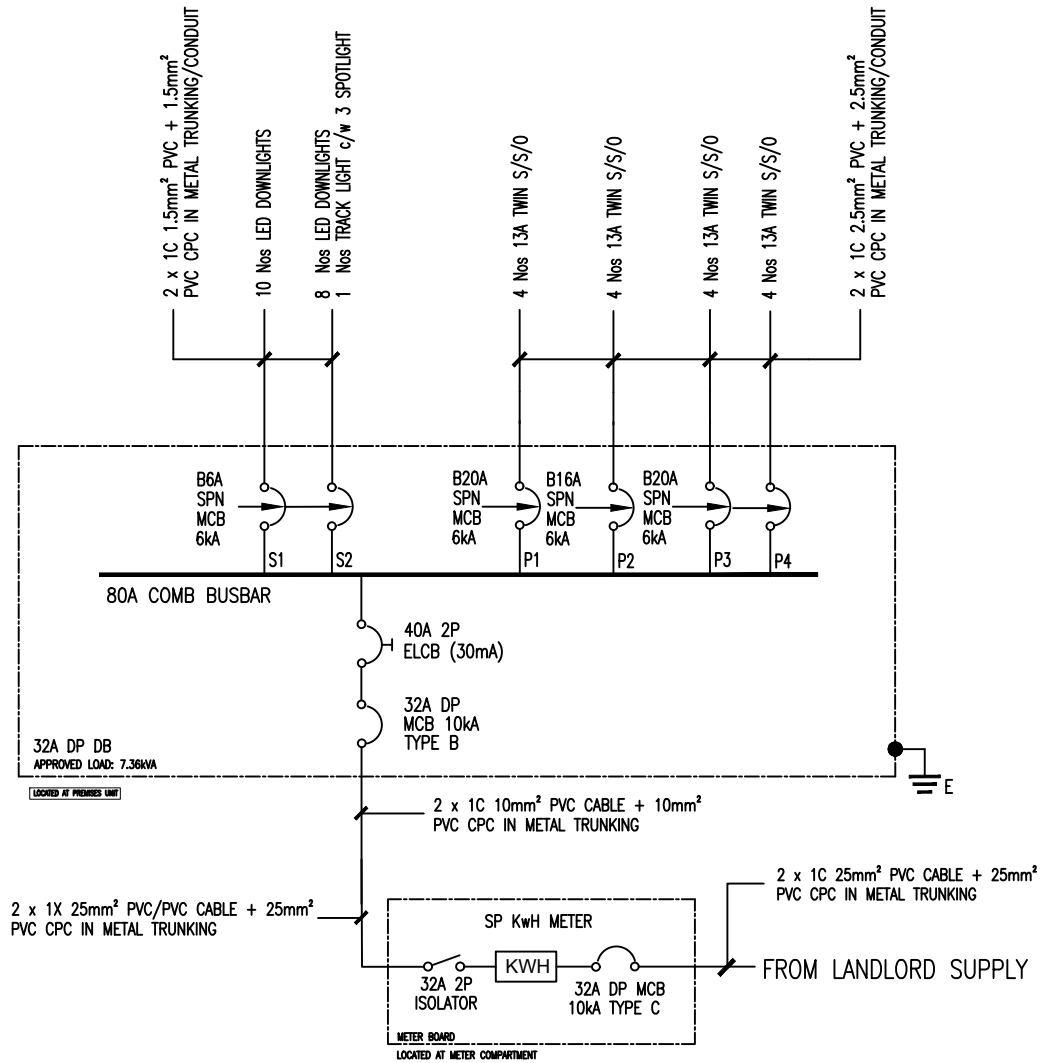

CLIENT / ADDRESS :	MAIN CONTRACTOR :	ELECTRICAL CONTRACTOR :	DRAWING TITLE :	LEW :	CHECKED :	DATE :
DIORA SPA BY MICHELLE 14 SCOTTS ROAD, #05-80, FAR EAST PLAZA SINGAPORE 228213	KYZEN INTERIORS PTE LTD	MBAY88 CONSTRUCTION PTE LTD	SINGLE LINE DIAGRAM (SLD)	SEOW SWEE LEONG EMA Licence No. : 8/25825	Ryan	12 JUL 2025
					DRAWING NO. : KYZ-DIO-FEP-00	REV : 0